14' Ascend Peak - Net Climber • Model RC-802SR

INSTALLATION GUIDELINE

USER GROUP: 5-12 Years
RECOMMENDED CREW: 3 People
INSTALLATION TIME: 8 Hours
CONCRETE REQUIRED: 0.75 yard³ - 20.25 ft³
NOTE: Concrete must have a minimum rating of 2,500 psi and must be mixed per manufacturer's recommendations.

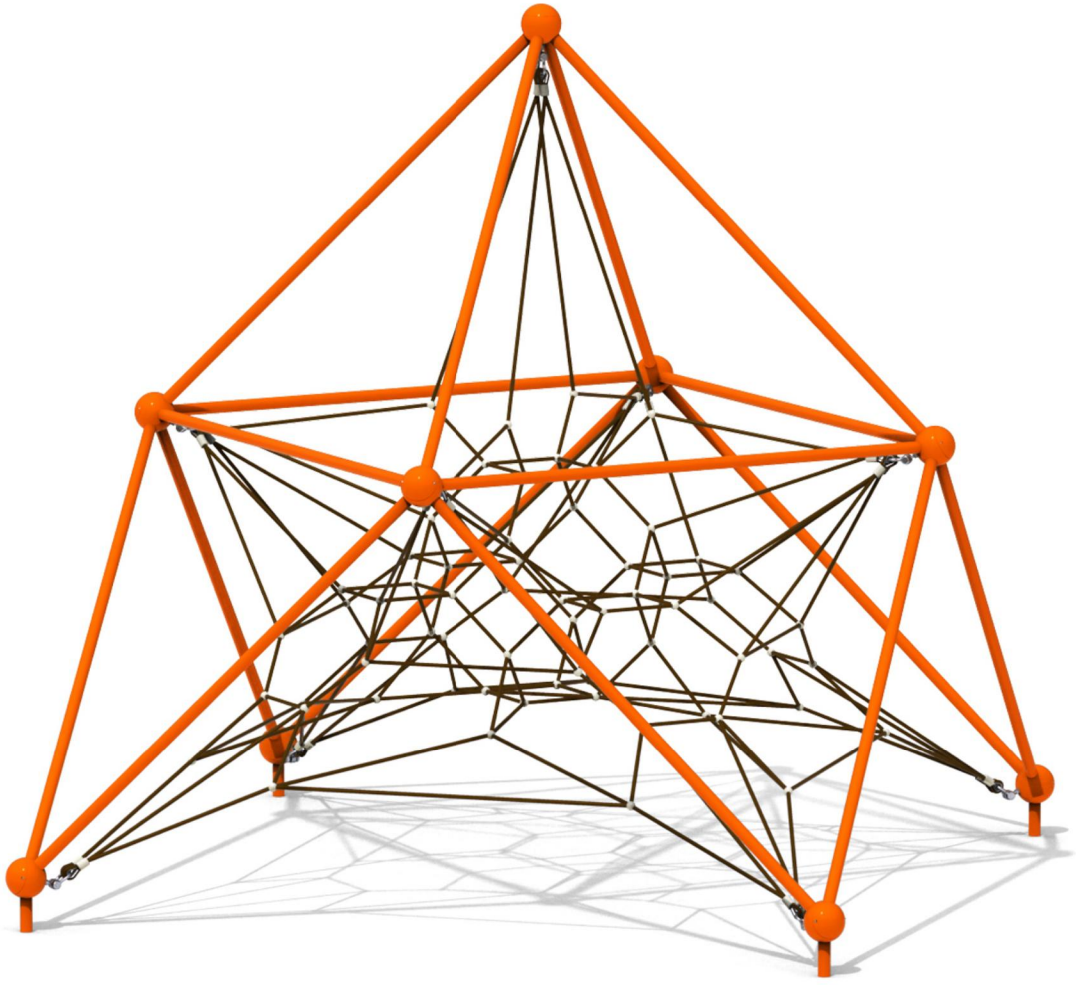

PRE-INSTALLATION CHECK:
Customer is responsible for verifying materials received by comparing received items with packing list. If any parts are missing or damaged, including documentation, contact your local sales representative immediately.

Supplier is not responsible for items discovered missing after 72 hours from time of delivery.

Before beginning installation, all installers must read and understand the Installation Introduction manual as supplied. If you did not receive a copy, or if you have any questions regarding any information in the Installation Instructions or this Installation Guideline, contact your local sales representative.

RC-802

INSTALLATION MANUAL

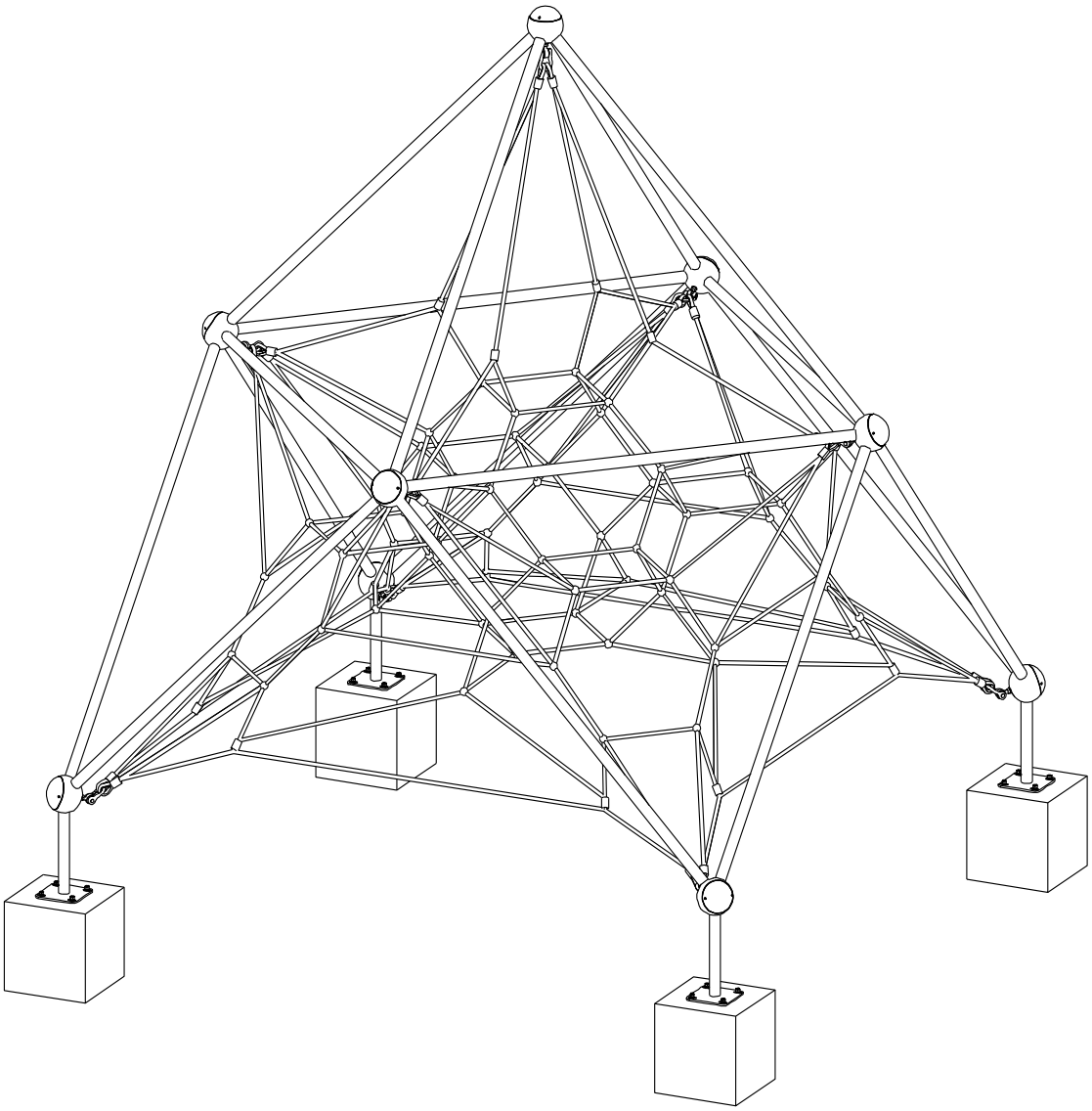

RC-802

FOOTERS AND USE ZONE

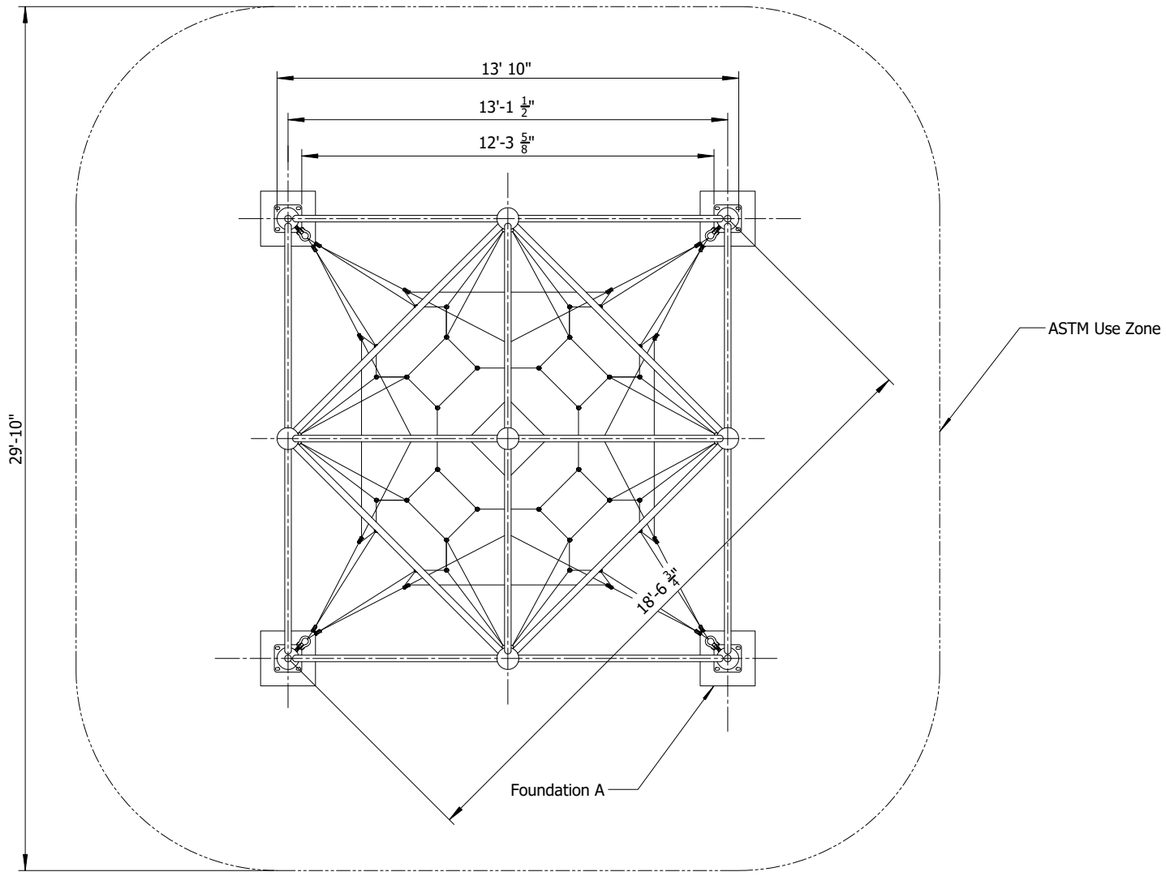

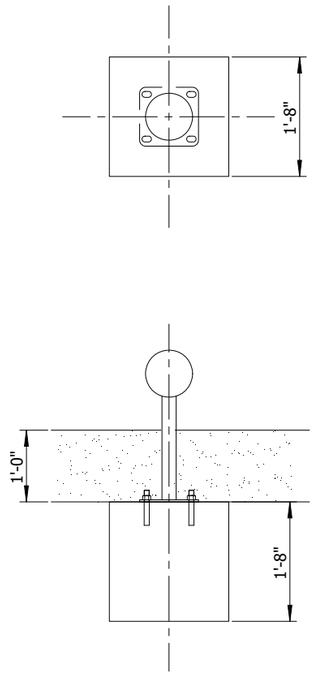

Foundation A
Detail

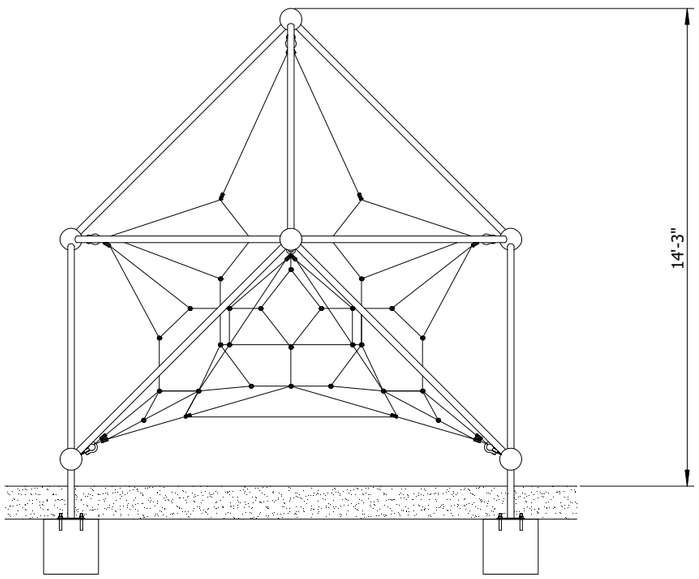

Footer Construction:

1. Excavate footer holes
2. Fill with concrete and level
3. Once concrete has cured, continue with assembly

LOWER FRAME ASSEMBLY

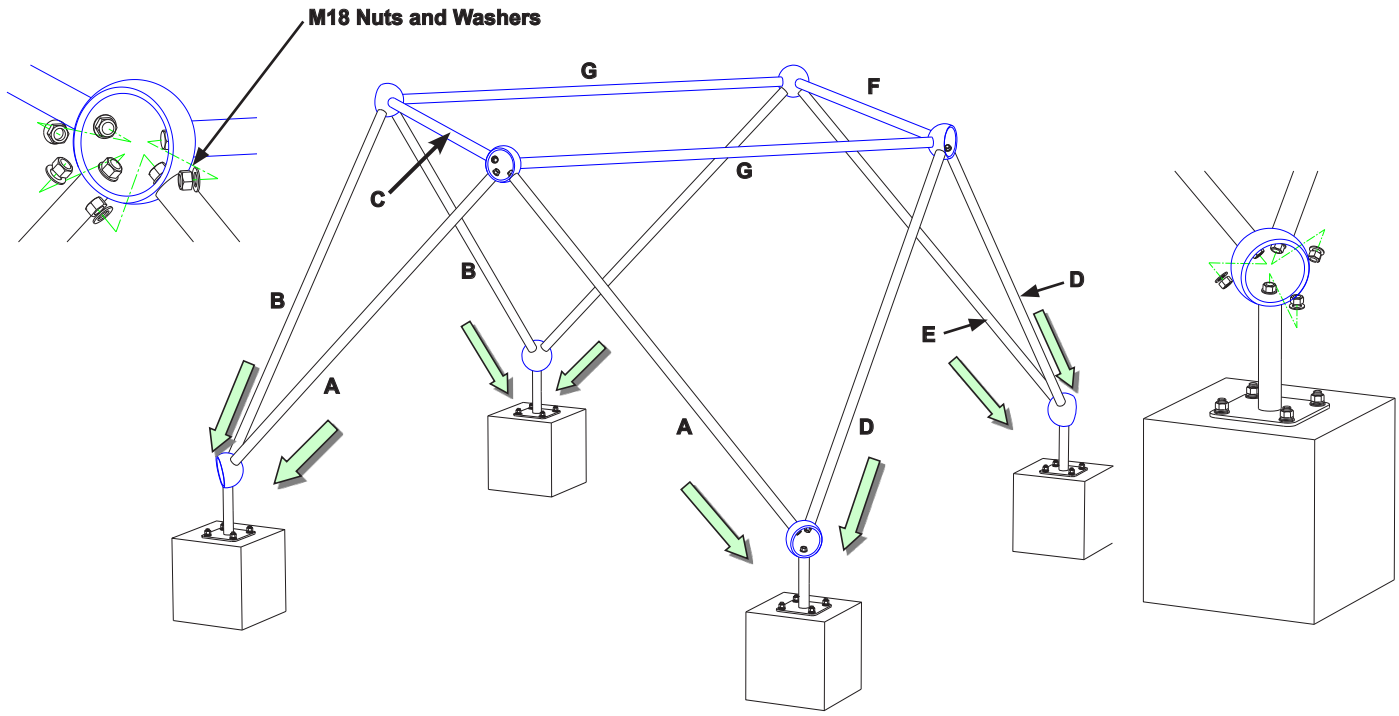

DO NOT install the base plates on the foundations yet.

All the longer pipes in the game are the same size.

1. Assemble the Base Posts to their corresponding Connector Balls and place on the foundations.
2. Assemble the next layer of the frame, assembling the pipes in the illustrated alphabetical sequence.

UPPER FRAME AND SHACKLE ASSEMBLY

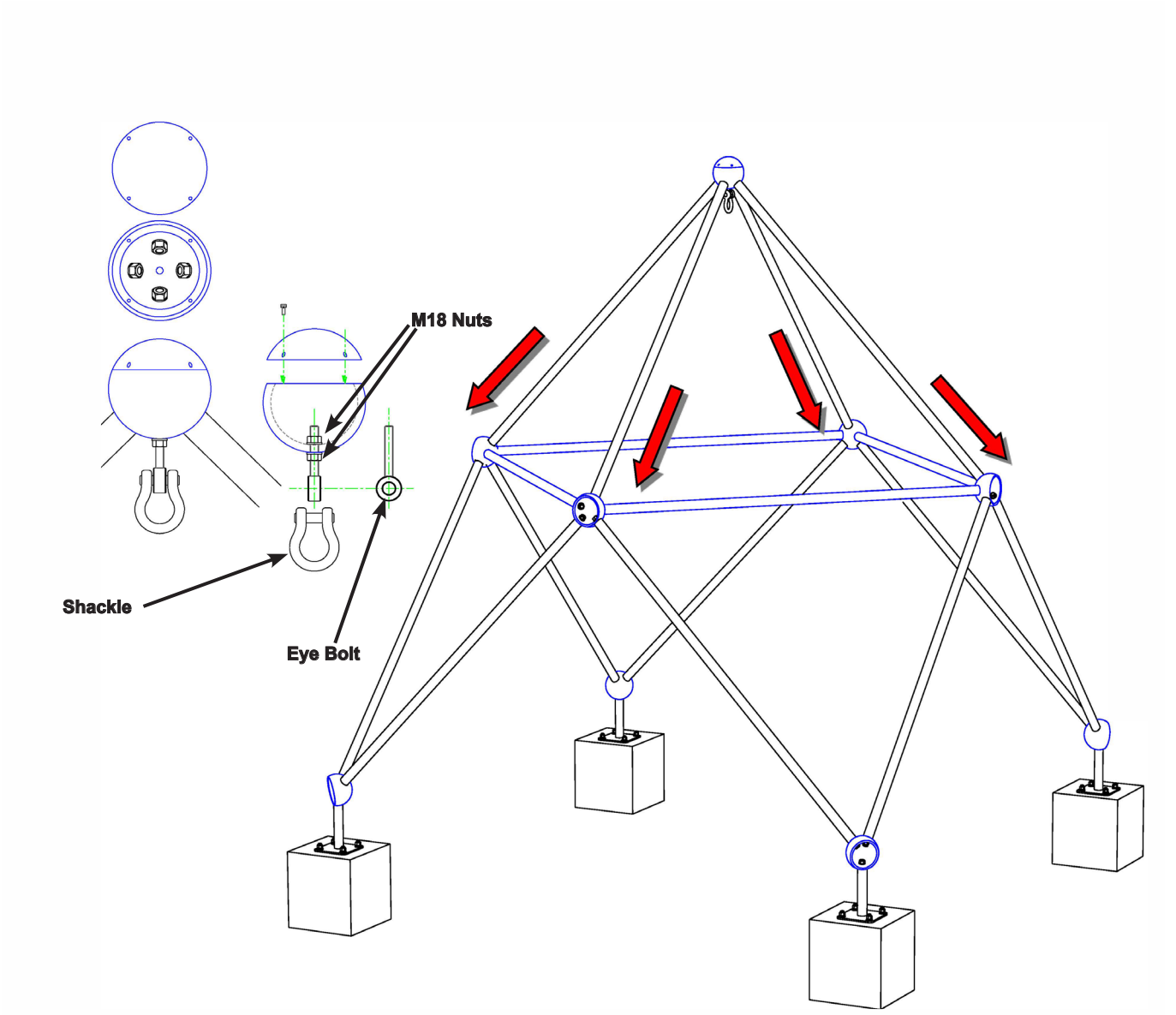

1. Assemble the upper Pipes to the lower Connector Balls, then to the top Connector Ball.
2. Assemble the Eye Bolts and Shackles to the Connector Balls, with two M18 Nuts each.
3. Use the layout drawing on Page 2 to confirm the proper location of the Base Posts and install in the Foundations, according to the directions on the next page.

EXPANSION BOLT INSTALLATION(TYPICAL)

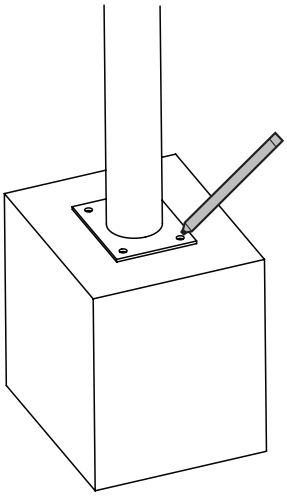

1

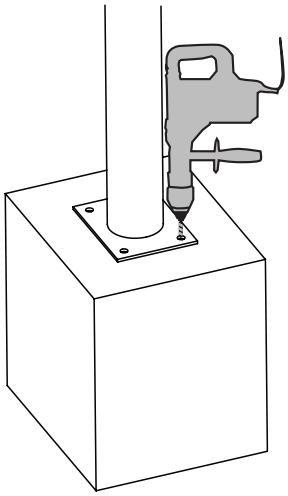

2

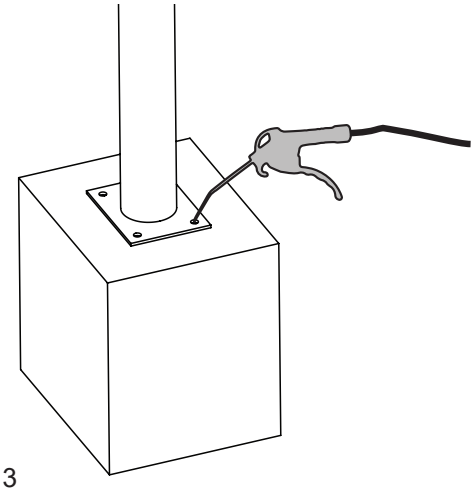

3

1. Use the base plates as a template to locate the anchor holes.
2. Use a hammer drill to drill the holes. The drill diameter must match the bolt and the depth must be at least the bolt length.
3. Clean the holes.
4. Assemble the washer and nut on the bolt and use a mallet to drive the bolts into the holes through the base plate.
5. Tighten the nut 3-5 turns past finger-tight to fix the anchor in place.

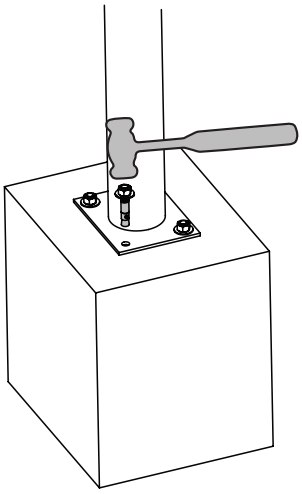

4

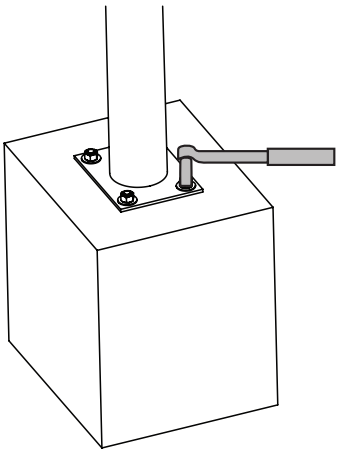

5

ATTACH NET AND TIGHTEN

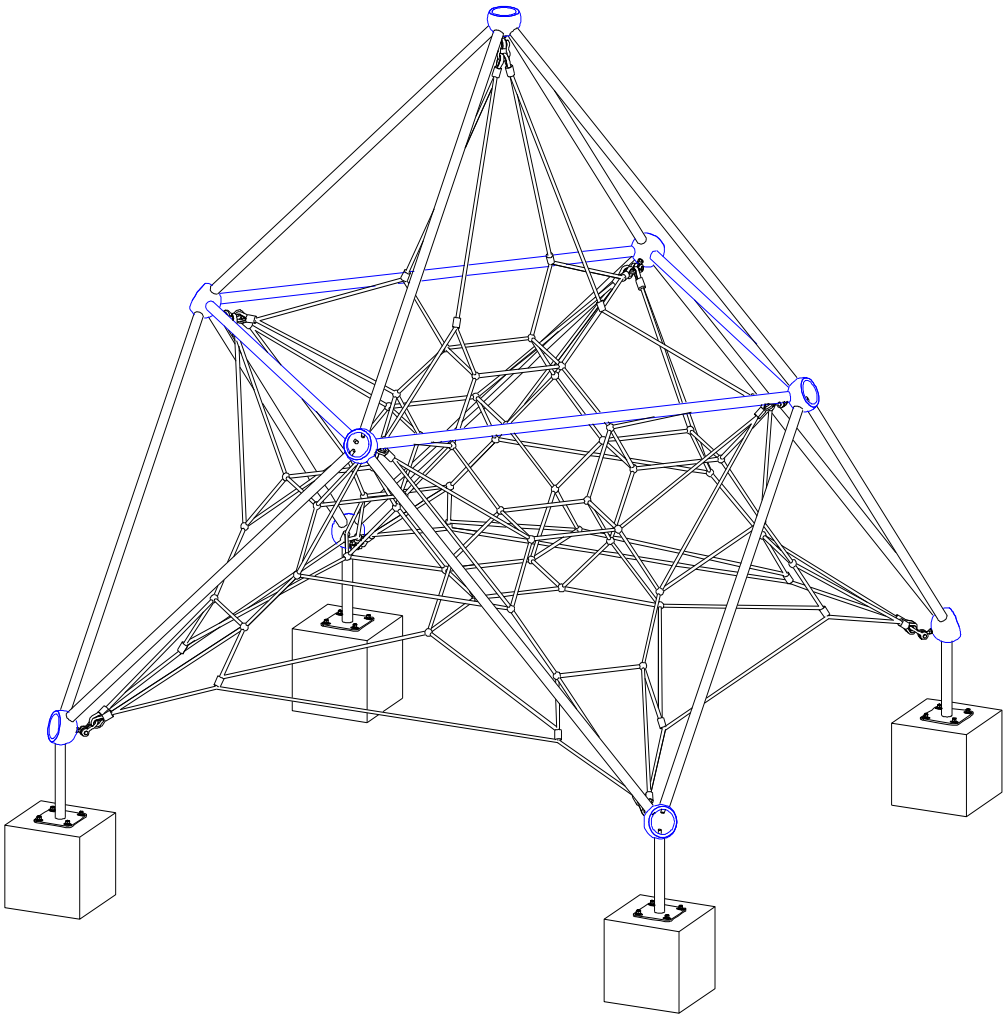

1. After securing the structure to the foundations, assemble the Net to the Shackles. Start from the top and work down.
2. Tension the net by tightening the nuts inside the Connector Balls. It may be necessary to loosen the nuts on the outside of the Eye Bolts. Adjust the tension evenly at all points, including the top.
3. Once the net is taut, tighten the external nuts on the Eye Bolts.
4. Confirm that all fasteners are tight.
5. Attach the Caps to the Connector Balls using the M15XL15 Bolts.

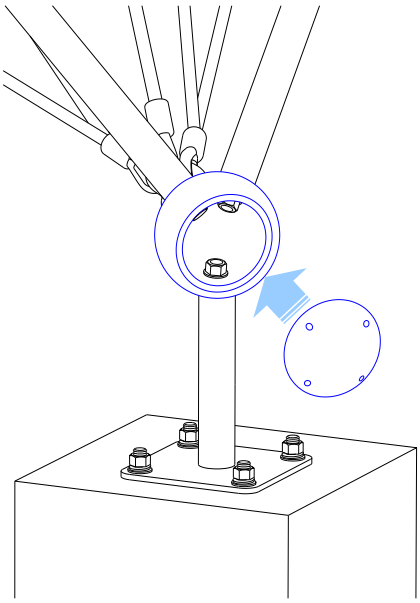

RC-802

PARTS LIST

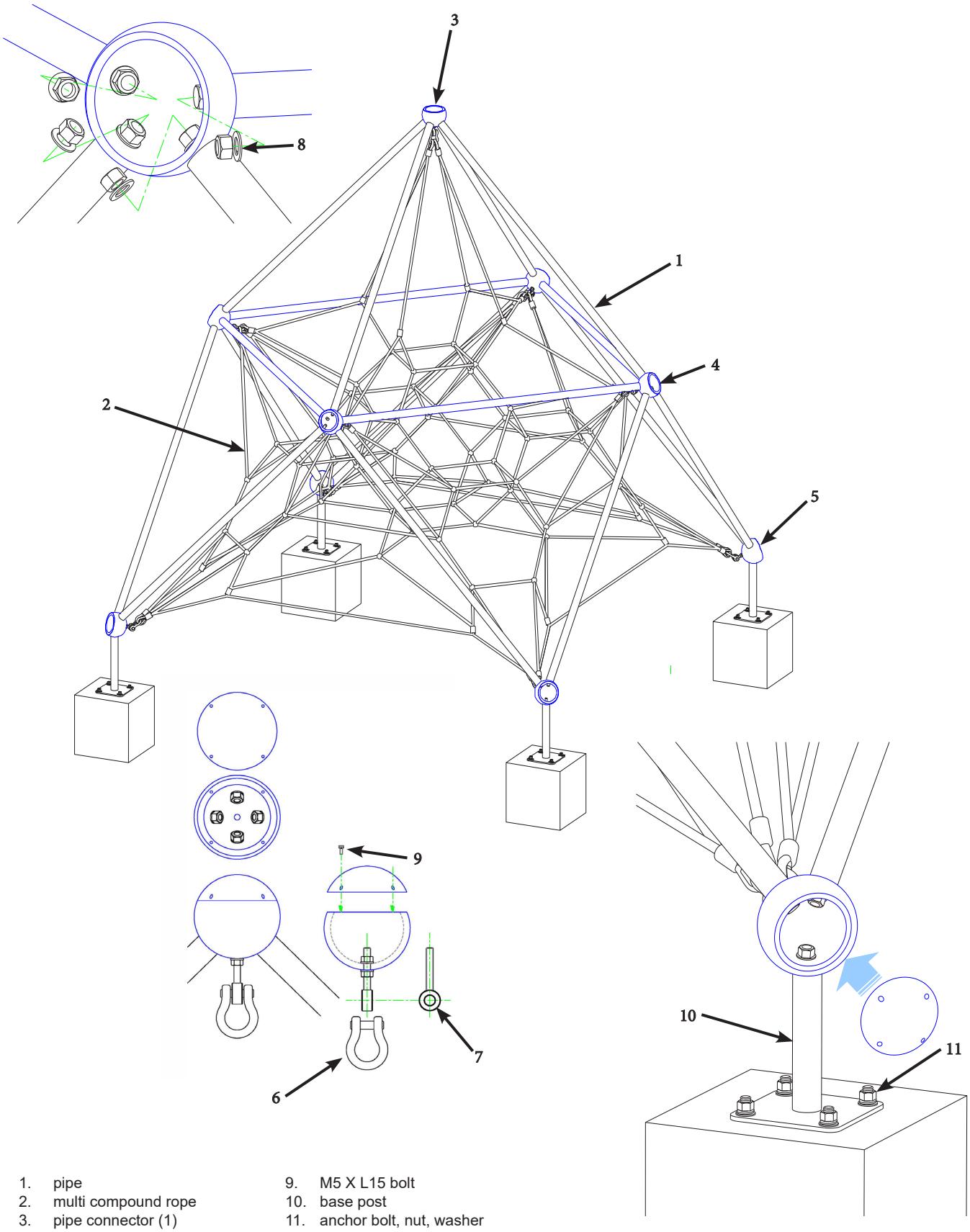

1. pipe
2. multi compound rope
3. pipe connector (1)
4. pipe connector (2)
5. pipe connector (3)
6. 3/4” Shackle
7. eye bolt
8. M18 nut, washer
9. M5 X L15 bolt
10. base post
11. anchor bolt, nut, washer

AFTER INSTALLATION, BEFORE OPENING FOR PLAY, RECOMMENDATIONS

Inspect Equipment for Correct Installation
If the equipment has not been installed correctly, do not open for play and take necessary precautions to keep closed until installation is correct, complete and re-inspected.

Protective Surfacing
Make sure appropriate playground surfacing has been installed to meet applicable standards.

Remove All Assembly Aids
Please make sure that all tools and assembly aids have been removed from the playing area before opening for play.

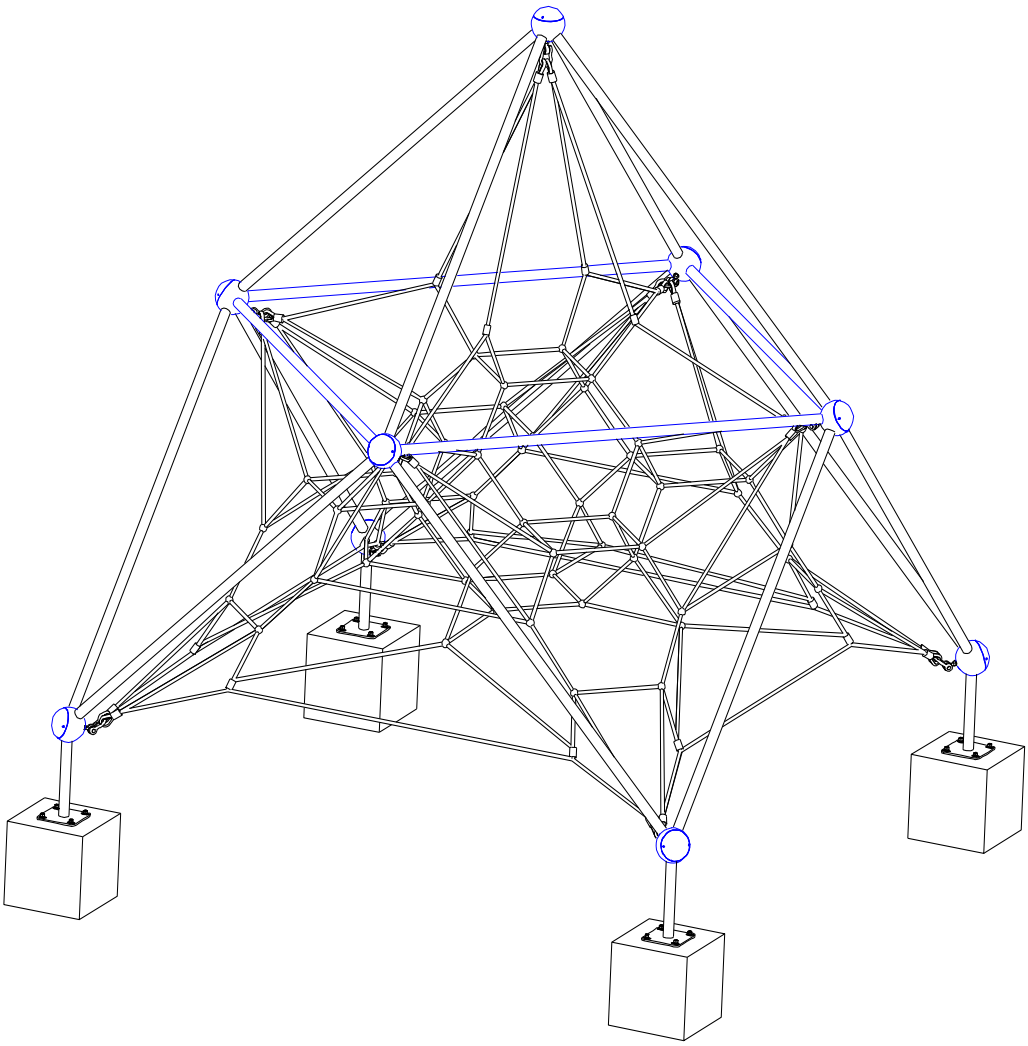

This equipment should be installed, inspected for proper installation, maintained and operated in accordance with applicable safety standards.

Regular maintenance is necessary on all park and playground equipment, including the protective surfacing. Proper maintenance extends equipment life. Maintenance of play environments requires commitment from dedicated and trained individuals with some mechanical ability and common sense.

With regards to overall safety, if you ever feel a piece of equipment or portion of the protective surfacing is broken or dangerous, immediately take the equipment out of service. If necessary, post personnel or fence the equipment to prevent use until the necessary repairs can be made. This is an important precaution that can potentially prevent an injury.

Maintenance Inspection – Frequency and Process
Because play equipment and surfacing are subject to changes from use, abuse, and climate, they must be inspected on a regular basis. The frequency of inspection will be determined by many factors including equipment age, use, and materials, and external factors like the age of the users, climate, and vandalism. Regardless of site-specific attributes of the playground, two types of inspections should be performed on all playgrounds: low frequency and high frequency.

Low Frequency Inspections
Often performed quarterly or semi-annually, low frequency inspections are in-depth investigations of the equipment and surfacing looking for wear and tear. This inspection requires a staff member with mechanical knowledge and extensive knowledge about play equipment and surfacing standards. During or immediately after the inspection, staff should do preventive maintenance and repairs and/or remove damaged equipment to remedy problems discovered in the inspection.

High Frequency Inspections
Often performed daily or weekly, high frequency inspections look at frequently changing conditions caused by use, weather, and/or vandalism. During a high frequency inspection, staff checks and corrects playground conditions such as loose-fill surfacing depths, sanitation issues, and the presence of trash and debris. If any hazards are discovered, staff should follow school or agency procedures such as completing documentation, taking the area out of use, and/or correcting the problem.

Loose hardware
Loose hardware can cause quality problems and put safety at risk. Therefore, loose hardware should always be tightened, and checks carried out to ensure that there are no missing parts.

Identifying replacement parts
All replacement parts are listed in the parts list. The parts list follows the installation requirements.

Actions to be taken during the break-in period
No later than 2 weeks after assembly, all hardware connections should be checked and tightened if necessary. One of the most important factors in proper maintenance is maintaining proper net tension. Net re-tensioning will be required after the first 60-90 days of use and then must be checked again on an annual basis.

Net re-tensioning
First prepare the turnbuckle by temporarily removing the loose fill material or by removing the poured-in-place box housing enclosure. With a large wrench, our the center part of the turnbuckle to tighten. If the turnbuckle is at its maximum tension, it may be necessary to loosen the turnbuckle and reposition the attachment anchor plated. It is very important to adjust the overall net tension evenly by working each turnbuckle in a balanced progression. Do not over tighten one turnbuckle and skew the net or put too much strain on one portion of the net.

Maintenance of protective surfaces
Surfaces providing fall protection must also be maintained regularly. It is particularly important to maintain the correct level of loose surface material and add more if necessary (refer to applicable standards).

Damage
Damaged equipment must be repaired as soon as possible. If serious defects that affect the safety and cannot be repaired immediately, the equipment then must be closed to prevent further use.