barkpark™

A PLAYCORE Company

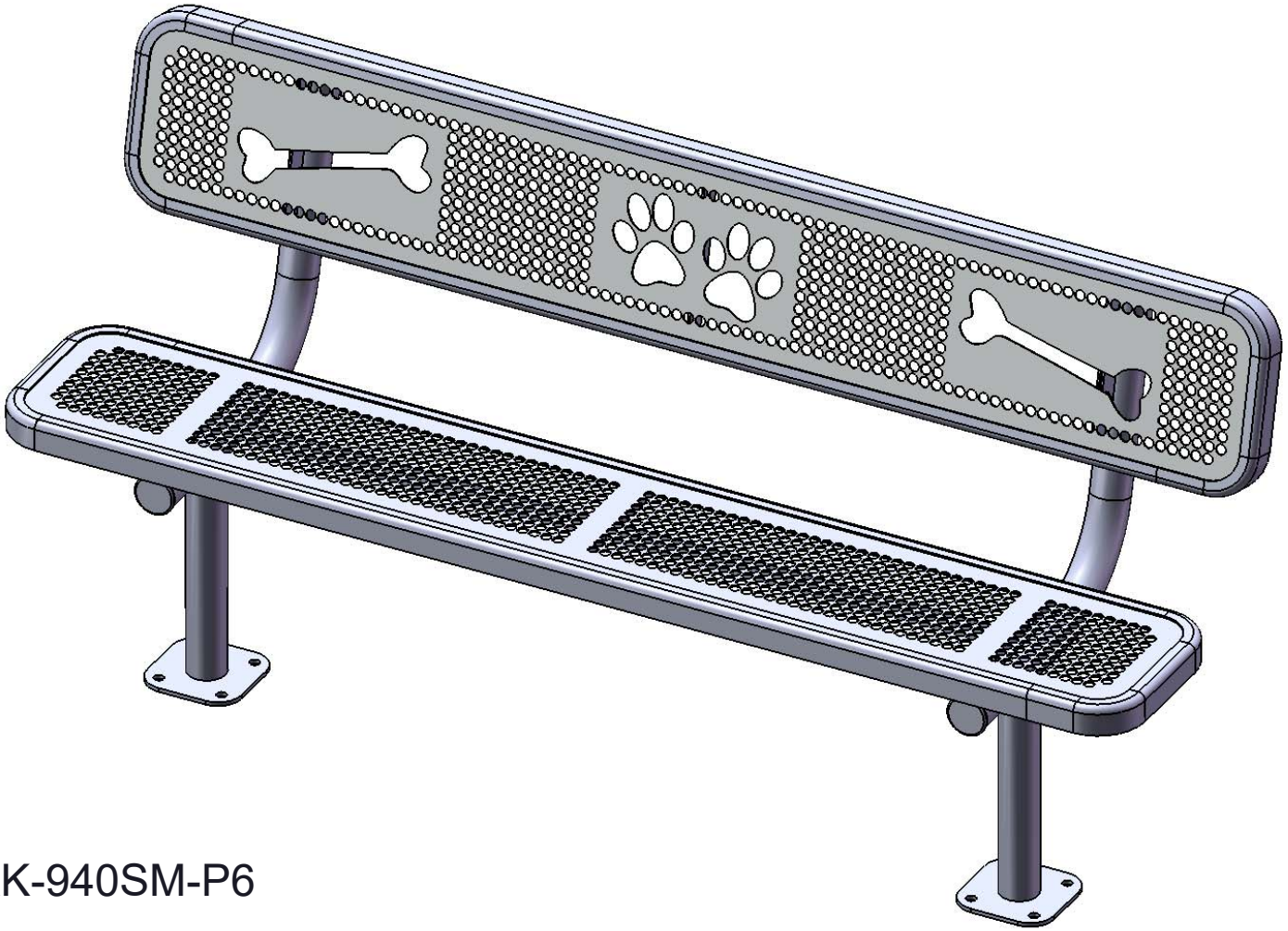

Model # BARK-940SM-P6

1675 Locust Street
Red Bud, IL 62278
Phone: 618-282-8200
Fax: 618-282-8202

WARRANTY & TERMS

WARRANTY: 5 Year Limited Warranty on Thermoplastic/Canine coated elements.

Bark Park guarantees all items for one full year to be free of defects in workmanship or materials when installed and maintained properly. We agree to repair or replace, any items determined to be defective. Items specifically not covered by this warranty include vandalism, man made or natural disasters, lack of maintenance, normal weathering or wear and tear due to public abuse.

ORDER INFORMATION: When ordering please include a brief description of all items. Be sure to include colors for Canine coated and powder coated surfaces. To assist Bark Park in entering orders properly, please fax or mail orders on your standard purchase order form. Quotes are good for 30 days.

SPECIFICATIONS: Due to Bark Park's continuous product improvement, we reserve the right to change specifications when necessary without notice.

PRICING: Bark Park strives to keep pricing as low as possible. However, should we encounter increases in our costs that are simply too large to absorb, we reserve the right to increase prices without notice.

TERMS: Approved accounts net 30 days. Initial order requires payment in full before shipment. A finance charge of 1-1/2% per month will be applied to all delinquent accounts. We accept VISA, MASTERCARD and AMERICAN EXPRESS.

FREIGHT CHARGES: Terms of sale are F.O.B. factory. Bark Park will prepay and add the freight to the invoice if requested to do so. All weights are approximate.

Damages or loss in transit is the responsibility of the carrier, whether visible or concealed. It is the responsibility of the recipient to assure that the order is received complete. Before signing the delivery receipt, inspect the shipment immediately and completely. Note any damages or shortages on the bill of lading. Damage reports must be filed within 5 days. Bark Park is NOT responsible for damages or loss in transit. Title to all goods passes to the customer at the time of shipment. Bark Park will assist in filing claims if the freight arrangements were made by Bark Park at your request.

CANCELLATIONS AND RETURNS: Cancellations are only accepted with approval of Bark Park. No merchandise shall be returned without a Return Goods Authorization number which is issued by customer service. Any authorized merchandise must be carefully packed and received in saleable condition. A restocking charge of up to 25% will be applied to all returned goods when the error is not the fault of Bark Park. All returns must be shipped freight prepaid.

SAFETY WARNINGS & EQUIPMENT INSPECTION

- Owners and installers please note these safety warnings and make use of this checklist on a regular basis.
- Follow installation instructions when erecting equipment.
- Ground surfaces around equipment should be restored as needed. Concrete footings should never be exposed. Surface depth should comply with ASTM and CPSC specifications.
- Check for and repair damage caused by wear or vandalism, a major factor in injury causing situations.
- All protruding bolts should be covered or cut off and finished smooth. Sharp edges on pipes should be capped or removed. Check for bent, broken, or severely worn pipe, and replace.
- All equipment should be free of rust and repainted whenever necessary to deter rusting.
- We provide our customers with layout sheets and installation instructions. Please keep on file the specifications sheet that contains the listing of every part used.
- Never add components not intended for use with this product.
- Regular maintenance is necessary in this and all park and recreational equipment to insure the safety of the user.
- Note: Proper maintenance of equipment requires regular tightening of all bolts, nuts, and setscrews.
- Note: Regular checking of all parts, castings, etc. should be made. If a part is broken or worn, it should be replaced immediately.
- Check to be sure all fittings are tight and that bars and pipes do not move.
- Replace all worn S-hooks. S-hooks must be completely closed. Failure to close S-hooks can result in serious injury to the user. NEVER reuse S-hooks.
- Test for free movement of swing hanger and other moving attached parts.
- Check for worn chains and replace them.
- A soft resilient surface should be placed under all swings extending at least twice the height of the top rail both front and back.

HARDWARE

5/16" x 1"
Machine Bolt

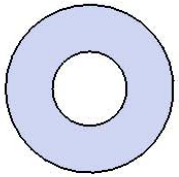

5/16" Washer

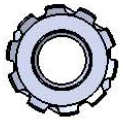

5/16" Kep Nut

TOOLS REQUIRED

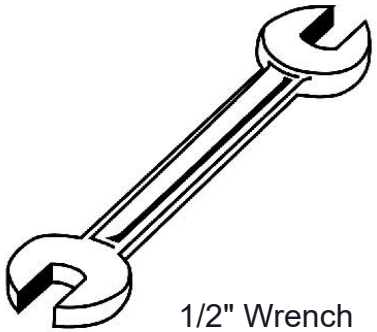

1/2" Wrench

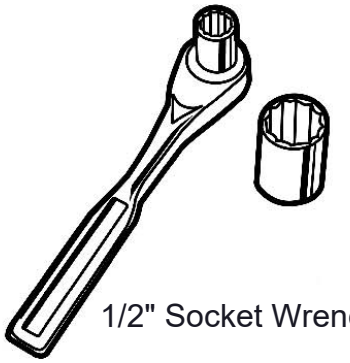

1/2" Socket Wrench

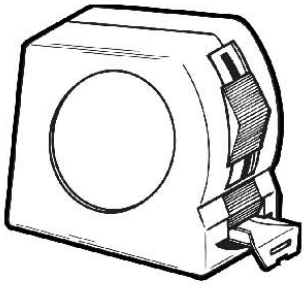

Tape Measure

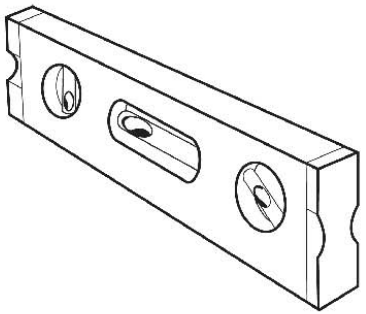

Level

BARK-940SM-P6
6' SURFACE MOUNT BENCH WITH BACK

Seats & Back: 11 gauge die formed angle frame 1”x1-7/8” with 3” radius corners. A 12 gauge piece of sheet steel is precision punched with a 5/8” hole to create the punched hole pattern. The understructure/attachment plates are fabricated from 7 gauge x 1-1/2” flat bar. Top is additionally supported to the outer frame with 7 gauge x 1-1/2” flat bar. Electrically MIG welded.

Coating: Oven fused functionalized polyethylene copolymer-based thermoplastic. Fluidized bed coating application with superior mechanical performance,
impact resistance and UV-stability.

Frame: 2-3/8” O.D. x 12 gauge pre-galvanized structural steel tubing. Seat/back support is bent over a mandrel through the bend radius producing a wrinkle free bend. Tube ends are pre-galvanized steel capped. Seat mounting points are 7 gauge x 1-1/2” die stamped steel flat bar. A 6” x 6” steel plate makes up the surface mount footing. The surface mount plate has four holes for stable mounting, and clipped corners for a more finished look. All electrically MIG welded.

Frame Coating: Electrostatic powder coated application oven cured.

Hardware: All stainless steel hardware fasteners.

Dimensions: 6’ bench surface mount with back. Seats and backs are 12” wide x 72” long. Seat height is 18-1/4”, seat back height is 35-1/4”. Total depth of seat with back is 22-1/4”.

COMPONENTS

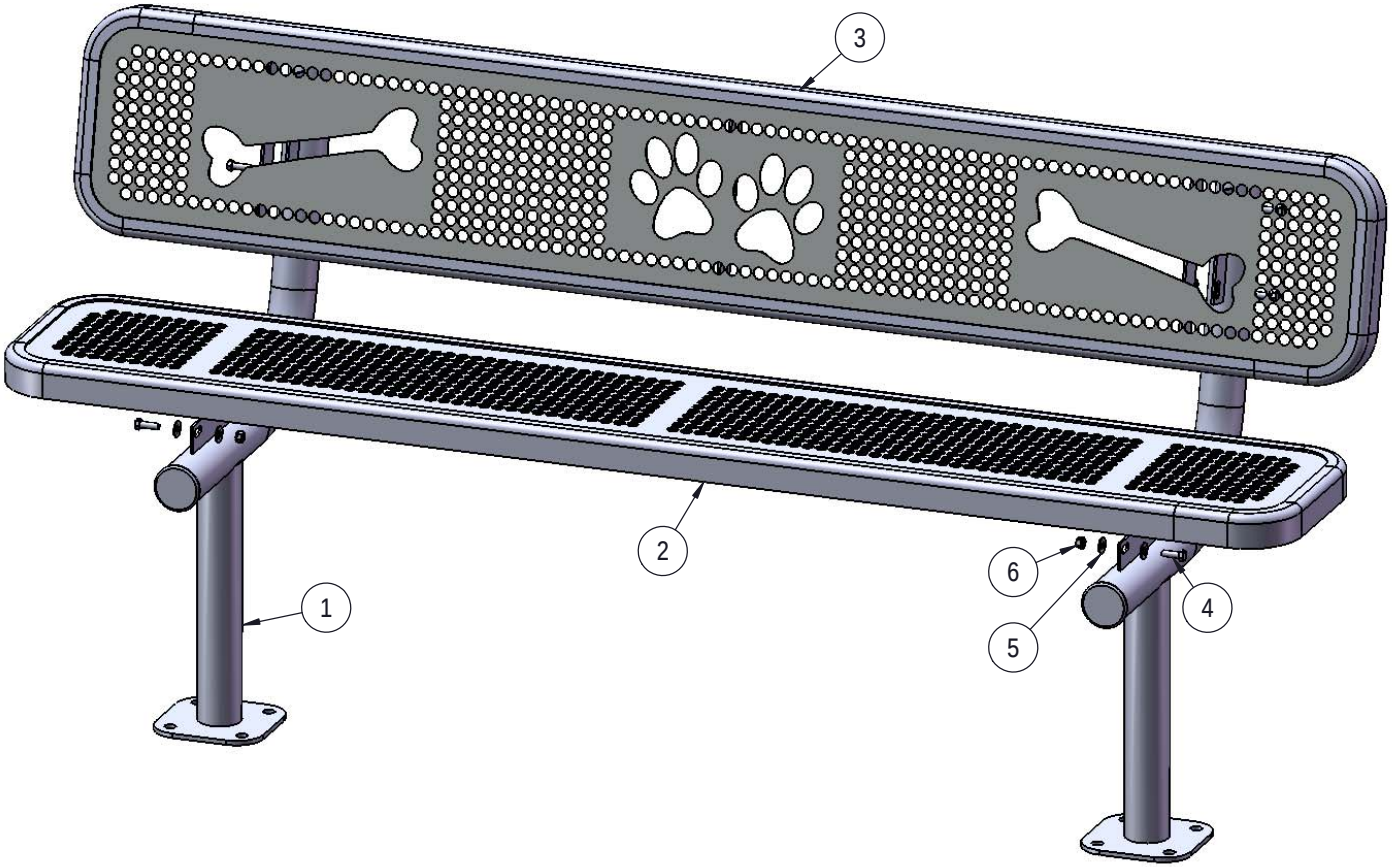

ITEM NO.	PartNo	DESCRIPTION	QTY
1	P-V940SM	940 Surface Mount Leg	2
2	T-P72-S	6' Punched Seat	1
3	T-01-08-0048	6' Bark Park Seat	1
4	33-05-0029	5/16" x 1" Machine Bolt (SS)	8
5	33-02-0007	5/16" SS Washer	16
6	33-03-0012	5/16" Kep Nut (SS)	8

Recommended Surface Mount Hardware:
3/8" x 3 1/2" Concrete Expansion Anchor Bolts
(Not Included)

STEP 1

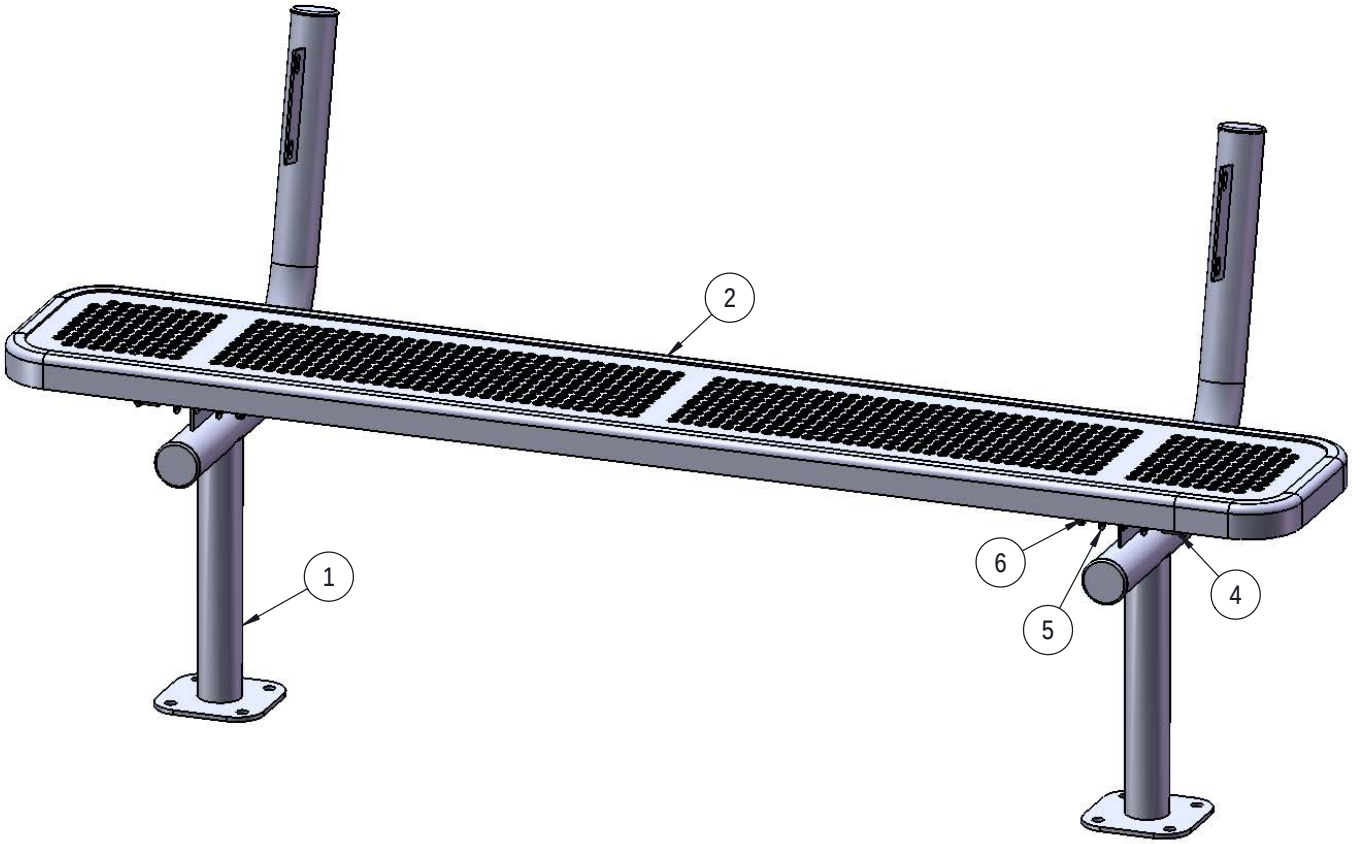

Attach the seat plank to the legs as shown using specified hardware.

STEP 2

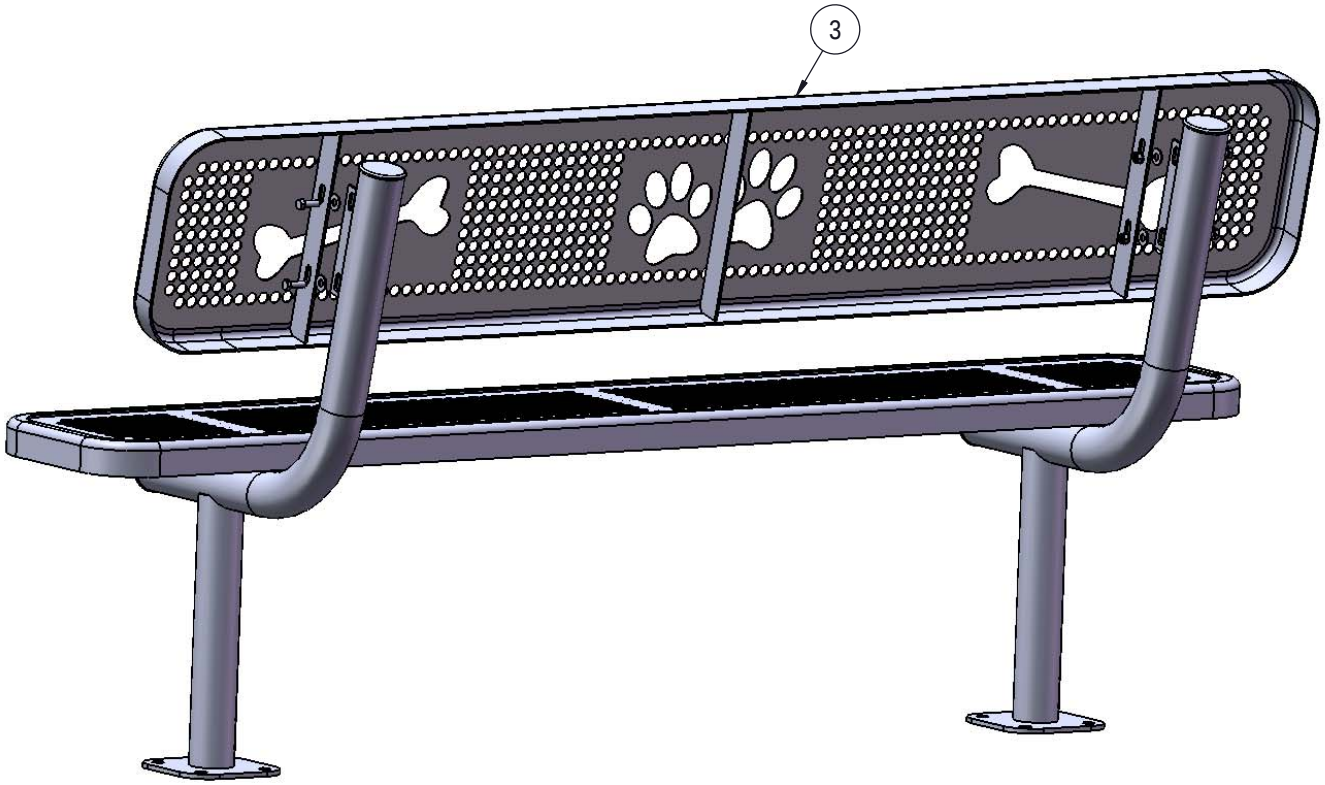

Attach the back plank the same way as the seat using specified hardware.
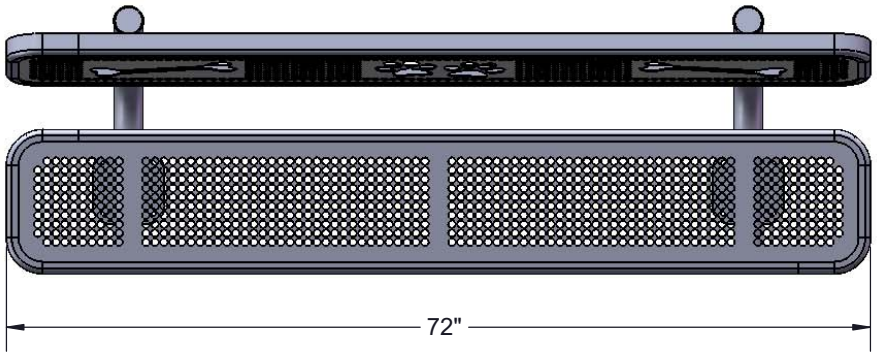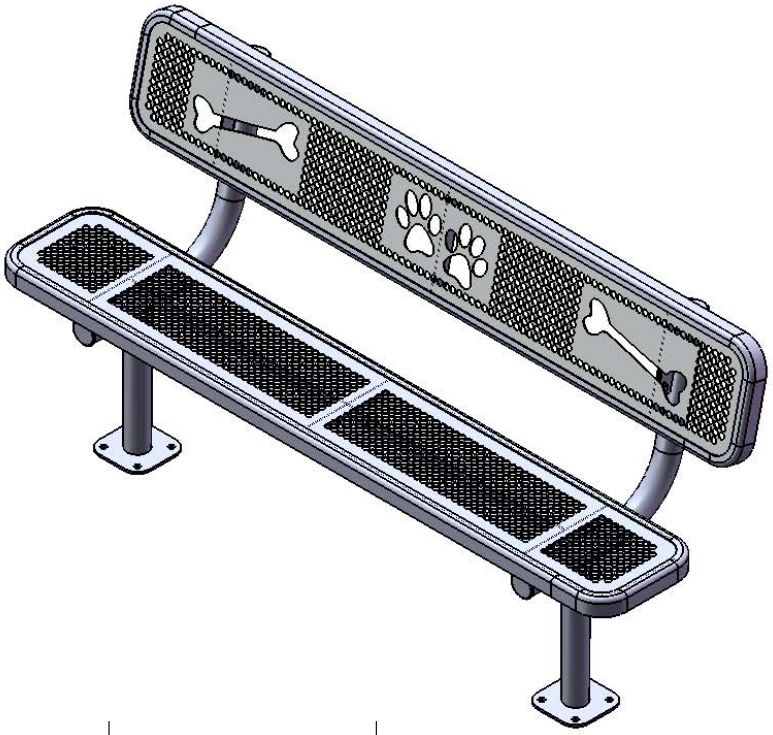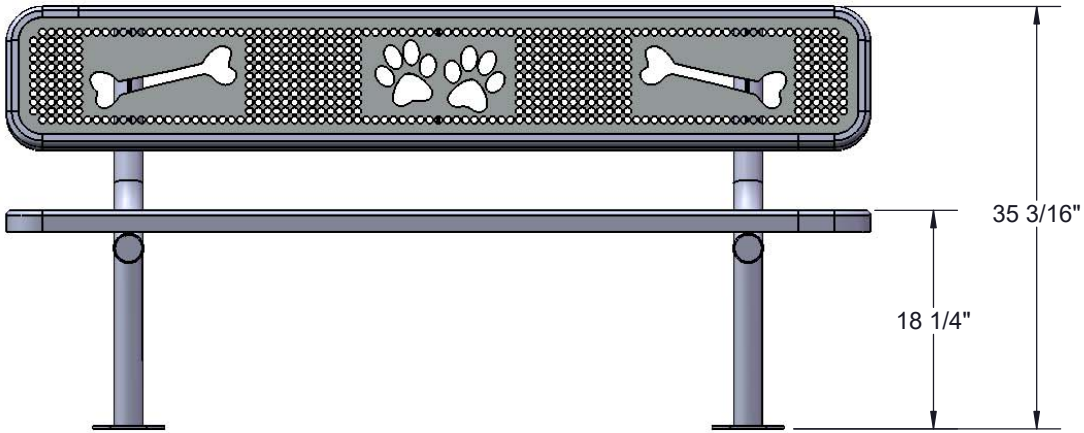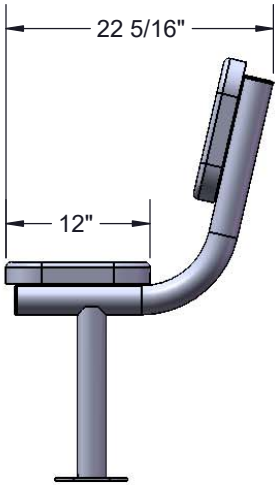
OVERALL DIMENSIONS