General
Installation Introduction

This document is provided as a general guide to playground installation. Each structure will include an installation sheet specifically made for that particular structure.

PLEASE NOTE THE FOLLOWING:

STORAGE:

When play equipment is received at a job site it should be installed as soon as possible (within a few days from receipt). The equipment is packaged to keep it safe and damage-free during shipment. However, the packaging material is not suited for periods of extended storage in an uncontrolled environment. The combination of moisture from the environment mixed with the heat generated inside the plastic wrapping may cause damage to the finish of the powder-coated items.

If immediate installation is not possible, certain steps should be taken to minimize the risk of damage to the equipment. If play equipment must be stored, ideally it should be kept in a controlled environment (storage container, inside building, etc…) away from heat and moisture. If this is not possible, the packaging material should be removed from the equipment, using caution so as not to damage the finish with special regard given to powder coated items.
Any large sheets of poly (panels, arch bridge panels, slide hoods, etc.) need to be stored flat or well supported to prevent warping.

INVENTORY:

Please note that inventory should only be taken with the Packing List that ships with each job.

FOOTING INFORMATION:

The following footing guidelines are general and do not supersede any specific information given in any individual set of drawings or instructions. Footing detail drawings are given at the end of this document. Recommended concrete minimum: 2500 PSI.

18” Wide x 18” Deep Footing (does not include safety surfacing depth)
Vertical posts in structure (3.5” and 5”)
Most Swings (excluding 5” Single Post)

12” Wide x 18” Deep Footing (does not include safety surfacing depth)
Slide Feet / Slide Supports
Transfer Stations
Lily Pads
Ground to Deck Stair Handrails
Single Steps
Climbers attached to Structure

18” Wide x 36” Deep Footing (does not include safety surfacing depth)
Single Post Swing (5”)

We recommend that you build your modular structure in a radiating fashion. This means that you will start with a single post or deck assembly located at the core of the structure creating a central backbone to build outward from. Erect this post or deck assembly with the posts in the footings but not concreted into place. After completing this task you will be able to radiate outward in all directions with the remaining decks, bridges, crawl tunnels, overhead events and modular components. **We recommend you use the ACTUAL PARTS to locate the vertical post locations ALONG with the FOOTING LAYOUT drawing provided**.

There may be situations or special circumstances that will require you to make your own judgment. If you have any questions or are unsure about the situation, please contact your local Sales Representative.

Taking the time to read these instructions in their entirety will help ensure that your equipment is assembled correctly, maintained properly, and enjoyed with proper adult supervision so that children can enjoy it for years to come.

PLAYGROUND SITE PREPARATION:

Using the provided plan view drawing of your playground, locate all structures within your site making sure that the placement of the structures meets all required clearances.

All asphalt, concrete and other such hard debris must be removed from the entire site prior to installation.

Site must be graded as close to level as possible to create the safest possible environment for the playground. Special installation considerations must be implemented for sites that are not level.

Check local soil and drainage conditions within the site area. Proper drainage around the structures and their supports is important. Inquire with local contractors in your area for the proper recommendations.

Check with local authorities regarding building codes, permit needs, requirements, etc. before beginning installation.

Site must be isolated from hazards such as swimming pools, ponds, lakes, other bodies of water, highways, roads, drop-offs, cliffs, etc. A method to contain children must be provided that still allows for observation by supervisors. If fences are used, they should conform to local building codes and/or ASTM F-2049.

Sites should be surveyed and marked for underground utilities prior to excavation.

Never leave the job site unattended without making sure that all open holes are covered with a material such as plywood. Rope off all unfinished equipment to keep the children away until the building is complete.

PRE-INSTALLATION CHECK:

Compare all items received to the main packing list. Notify your sales representative immediately if any parts are missing or damaged. We are not responsible for items discovered missing after 72 hours from time of delivery!

COMMON INSTALLATION TOOLS

A) 9/16” Wrench
B) Wheelbarrow (to mix concrete)
C) High Speed 3/8” Electric Drill w/clutch with 1/4” and 1/2” Bits
D) String Level, Magnetic Level, 4’ Level
E) Large Flat Head Screwdriver
F) Mallet
G) Hack Saw
H) Impact Gun
I) Shovel / Post Hole Digger / Auger
J) Pry Bar
K) Tape Measure

L) 3/16” and 1/4” Allen Head Wrench

M) T-45 TORX Tool (supplied by the manufacturer) N)
T-30 TORX Tool (supplied by the manufacturer)
O) Straps and boards to help hold structure in a level position before and while concrete sets.

SAFETY AND CLEARANCE STANDARDS AND GUIDELINES:

Our play equipment is engineered and designed based on the most current ASTM F1487 standard.

For information regarding public playground safety and your responsibilities as the purchaser, manager or installer of this equipment, we recommend you contact the U.S. Consumer Product Safety Commission (CPSC) for the latest copy of the Public Playground Safety Handbook. You may obtain a copy of this guidebook by contacting the CPSC at 800-638-2772, or by visiting their website at www.cpsc.gov.

The playground area, both around and underneath the structure, must be covered with impact attenuating surfacing material. The surfacing material used should have a Critical Height Value of at least the height of the highest designated play surface on the equipment. The critical height for surfacing is to be rated in accordance with the most current version of ASTM F1292. To purchase a copy of ASTM F1292, Standard specification for impact attenuation of surface systems under and around playground equipment, contact American Society for Testing and Materials (ASTM) by calling 610-
832-9585, or by visiting their website at www.astm.org. This information is also given in the Public Playground Safety Handbook. Additional considerations for protective surfacing materials are given as well.

Acceptable playground surfacing materials are available in two basic types: unitary or loose-fill. Contact the manufacturer of unitary surfacing materials (rubber matting) for the critical height rating for their products. If loose-fill surfacing materials are used, please refer to the Public Playground Safety Handbook published by the CPSC for critical height values for tested materials. We recommend a minimum depth of 12” for our play

equipment. Never add components that are not approved by the manufacturer.

If relocation of any equipment is desired that differs from the drawings and/or site plan that was provided, prior written approval from the manufacturer must be obtained. Failure to do so may create a dangerous play environment for children.

If individual pieces of equipment are ordered as parts only (without being placed in a site plan drawing), it is the responsibility of the customer/installer to determine the appropriate use zone needed for that equipment. Contact your local sales representative to get this information.

If you have any doubt about the correct placement of any piece of equipment, please contact your sales representative to get clarification.

Unless specified otherwise, the fall height of a piece of equipment is the distance between the highest designated playing surface and the protective surfacing beneath it.

The use zone for equipment should extend a minimum of 6’ in all directions from the perimeter of the equipment.

The use zones of two stationary pieces of playground equipment that are positioned adjacent to each other may overlap of the adjacent designated play surfaces of each structure are no more than 30” above the protective surface and the equipment is at least 6’ apart.

If adjacent designated play surfaces on either structure exceed a height of 30”, the minimum distance between the structures should be 9’.

Use zones of the play equipment will be shown in the plan view drawing and must be adhered to. The fall height of the equipment will also be given in the drawing.

INSTALLATION GUIDELINES

Excavate holes in accordance with footing drawing. If the site cannot be graded level, adjust the depth of footings to maintain a level footing base. If soil conditions are loose or unstable, a larger diameter footing may be required.

As mentioned earlier, we recommend that the equipment be built in a radiating fashion from a central post. After verifying equipment will fit in area as shown on drawings, locate and set central post in footing hole.
Assemble the entire structure before pouring the concrete, using the equipment to place vertical posts (verify using footing drawing). This will be the procedure unless otherwise instructed per individual instruction. After completing. assembly, make sure structure is level and plumb across the board before pouring concrete. Concrete with a minimum PSI 2,500 must be used and should be mixed in accordance with the manufacturer's specifications.

Never leave the installation site unattended without making sure that all fastening hardware on all equipment is tight. Failure to do so may result in injury or component damage.

All installation areas should be roped off with clearly marked warning signs posted. Even during installation, it has been found that children will use unattended equipment - thereby risking accidents. Do not attach swing chains, exercise rings, or similar moving components until the entire construction is complete and safety surfacing is in place. Remember that any equipment that appears to be complete will invite unauthorized usage regardless of its actual state of readiness.

Keep installation site roped off for at least 48 hours before equipment usage to allow concrete to harden.

We recommend you have a Certified Playground Safety Inspector (CPSI) on site during installation. At a minimum, a CPSI should inspect your structure after installation and safety surface is in place and prior to children playing on the playground.

Typical Overhead Layout View

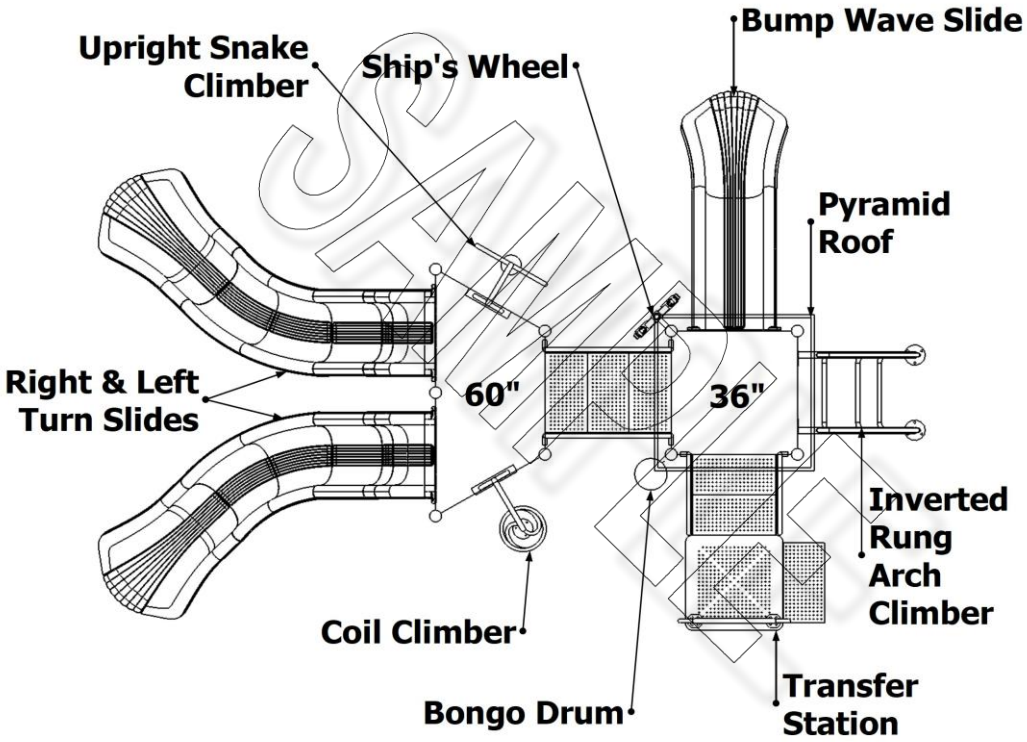

Typical Footer & Post Layout Diagram

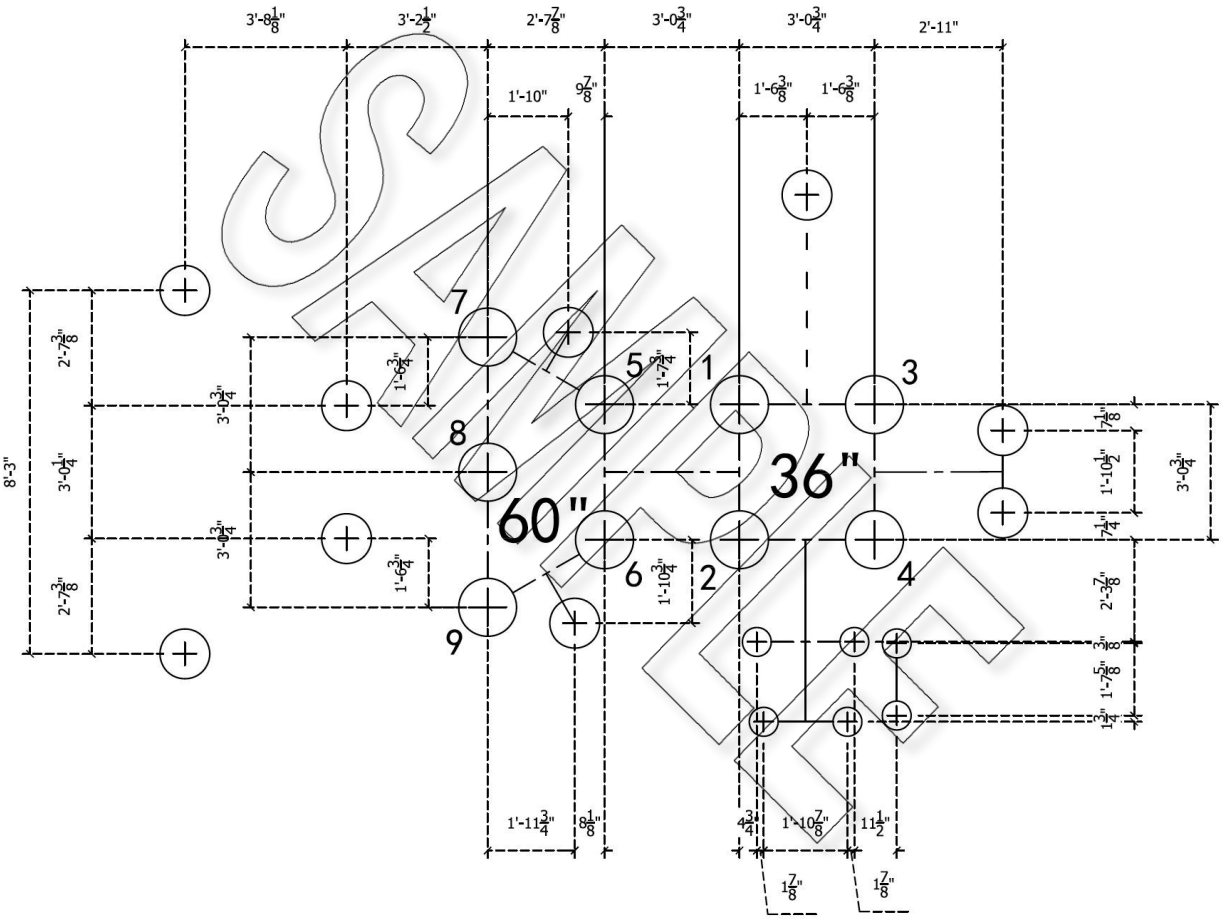

Example of Footer

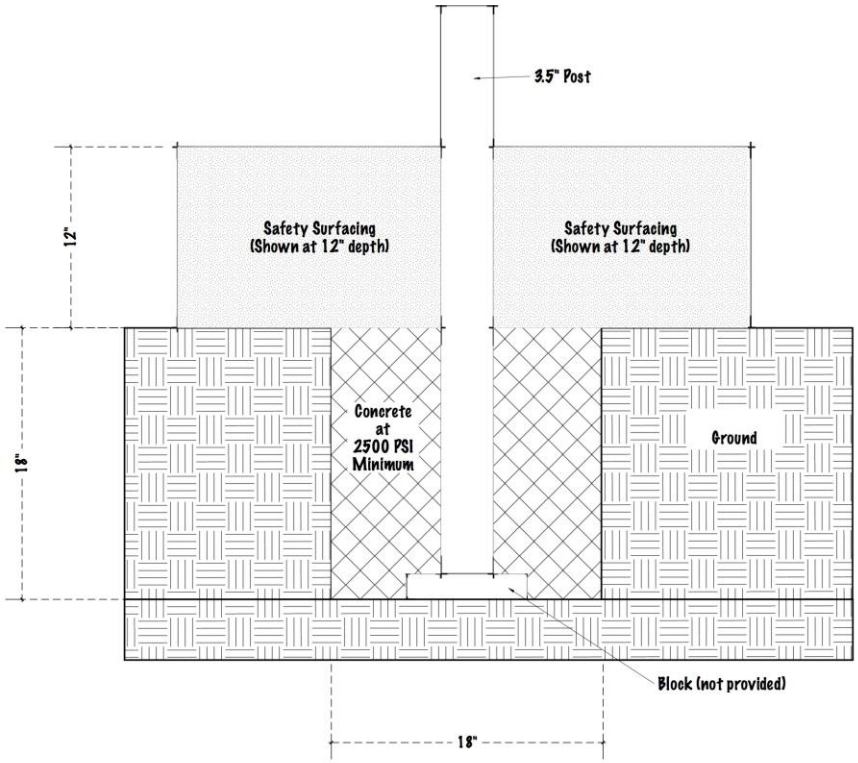

Curved Post Triple Wing Climber

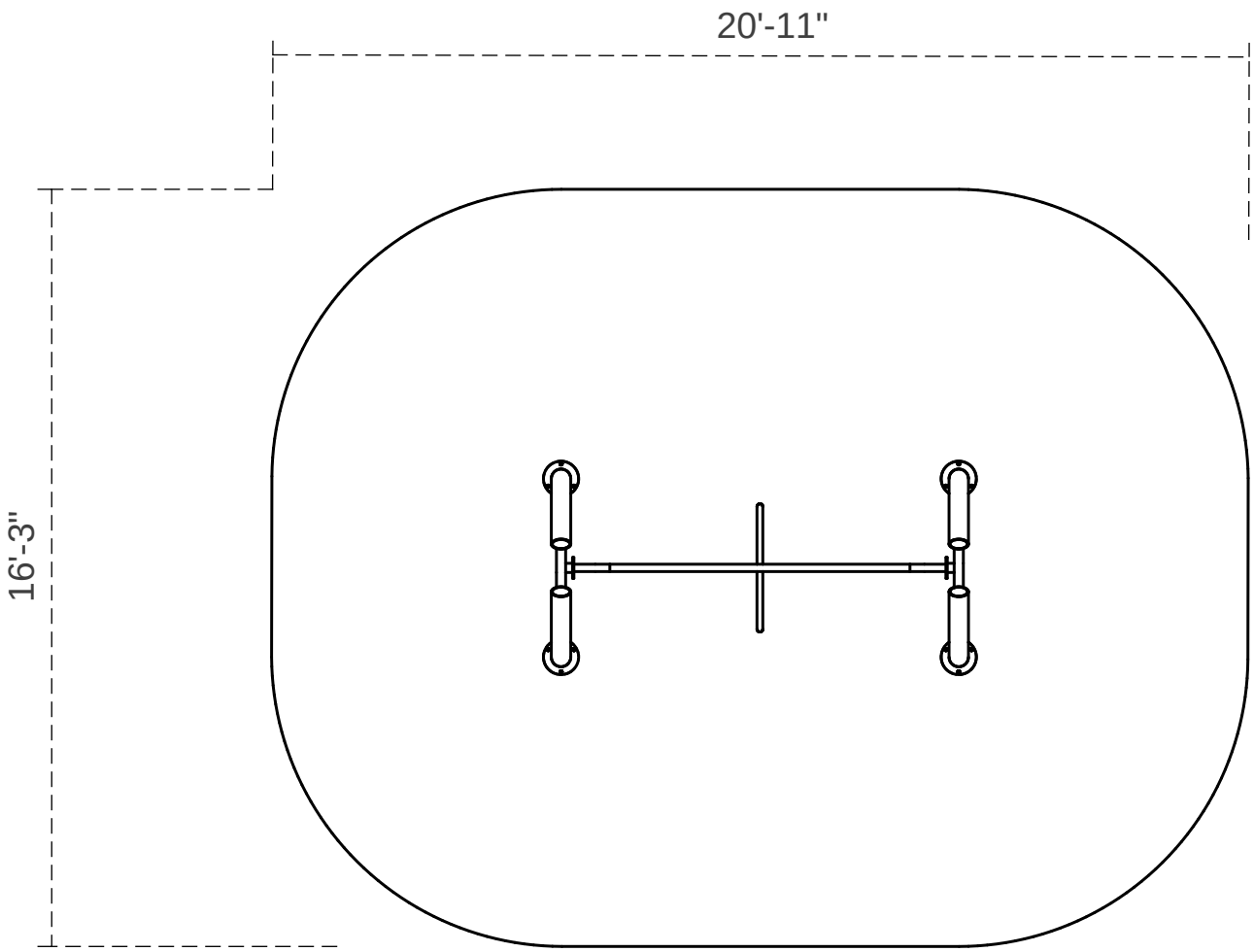

Footprint: 4'-3" x 8'-11"
Use Zone: 16'-3" x 20'-11"

SKU: PGS010

PRO PLAYGROUNDS
The Play and Recreation Experts
1-800-573-7529 | www.proplaygrounds.com

Created On: October 8, 2019

The information provided on this sheet is subject to change without notice.